Kitplanes for Africa (Pty) Ltd
Port 49 Varkfontein 25IR
Hangar 1
Petit Airport
Rudi Street, Petit
Benoni, 1502

Vat no – 4190250029
AMORG – M715
Office - +27 (0) 11 965 6205

www.kitplanesforafrica.co.za
info@kitplanesforafrica.co.za

SERVICE BULLETIN

AIRCRAFT EFFECTED: All models
BULLETIN NUMBER: SB019
ORIGINAL ISSUE DATE: 23-11-05
REVISION DATE: 01-11-2026
SUBJECT: Control rod-end failure
APPLICABILITY: All KFA aircraft
COMPLIANCE: Mandatory

Problem: There was a recorded case of a Bushbaby loosing aileron control due to rod-end bearing failure.

The failure occurred in the male bearing between the FBC-1 bell crank and the FCS-A control stick housing.

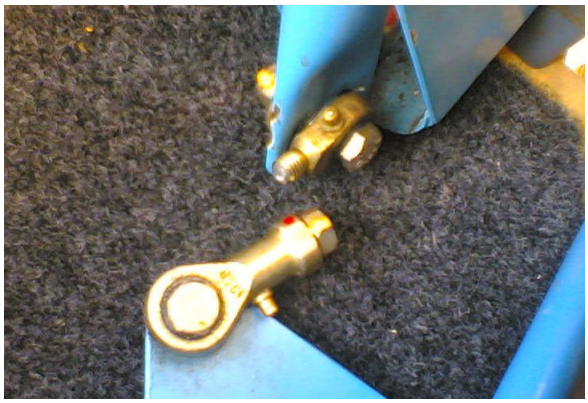

The eyes of the two rod-end bearings allow the control stick to move freely forward and aft within a limited range.
If this range is exceeded the bearings will be subjected to a twisting load.
The thread on the male rod-end bearing is the weakest link in the assembly and will fail first.
The amount of control stick travel is controlled by the two stop clamps, one either side of the FEV-1 bush on the FCT-7 elevator pushrod.

Solution: Inspect the two rod-ends for binding by moving the stick full forward and aft, the bearings must have slight free play at either end of the elevator travel.
If there is no free play, replace the male rod-end bearing, install and rig the assembly according to the procedure below.
If there is any doubt about the condition of the bearing, replace it!

- When rigging the elevator travel, inspect the two rod-ends for binding by moving the stick full forward and aft, the bearings must have slight free play when the stop clamps contact the FEV-1 bush.
- If there is no free play, follow the procedure below to obtain full elevator travel whilst still having play on the rod-end bearings.
- The N006 locknut **MUST** be installed and set. It is not acceptable to have the rod-end bearings rotate about the thread after rigging.
- If no lock nut was installed the male and female bearing **MUST both** be replaced.

Procedure:

Please see figure below for reference

1. Set the hose clamp limit stops on the elevator tube for the desired up and down elevator, normally 25º down & 30° up. If more up elevator is required then reduce the down travel

NOTE :	The rotation in the rod-end bearing allows for a total elevator travel of 40°.

2. Thread the N006 locknut onto the FC-2 male rod-end bearing, thread the FC-1 and FC-2 bearings together.
3. Install the assembled bearings in position, replace the B0625 bolt with a 6x40 (B0640) bolt and fit an M6 fender washer (FW006) and a ø 8 × 3mm brass bush (BB8003) (number 16 in the sketch below) on both ends of the bearing, on the top and the other between the bearing and FBC-1 aileron bell crank as in the sketch below.
4. Move the stick full back until the stop is engaged. Rotate the rod-end bearing forward and lock the lock nut. Move the stick fully forward and check that there is still free play in the rod-end.
5. When rigging is complete, mark the FC-2 rod-end thread for future inspection to ensure the locknut remains set.
6. Record the replacement/ inspection in the logbook and have an AP inspect and sign out the work.

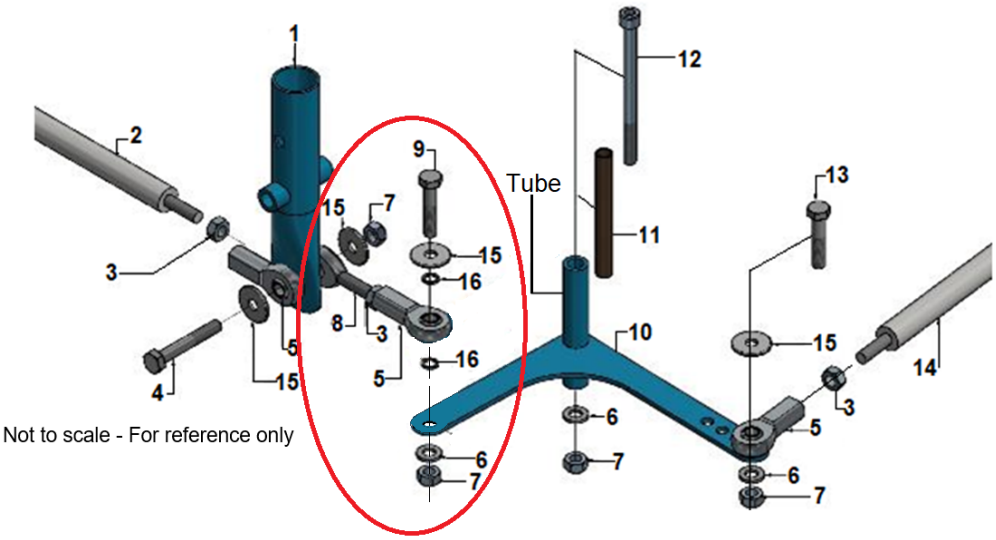

Fig #	Part #	Part description	Qty	Notes
1	FCS-A	Control stick housing	2	One per side
2	FCT-1	Push-pull tube 350mm	1	
3	N006	Nut M6	3	
4	B0640	Bolt M6 x 40	1	Cut thread to size
5	FC-1	Rod-end bearing. Female M6	3	
6	W006	Washer M6	3	
7	NY006	Nylok M6	4	
8	FC-2	Rod-end bearing. Male M6	1	
9	B0640	Bolt M6 x 40	1	
10	FBC-1	Bell crank. Aileron	1	
11	BB8069	Bronze bush. 8 x 69mm	1	
12	CS6100	Cap Screw M6 x 100	1	Cut thread to size
13	B0635	Bolt m6 x 35	1	Cut thread to size
14	FCT-2	Push-pull tube. Aileron (830mm-safari, 800mm-Explorer)	1	S-shape - Safari, Straight - Explorer
15	FW006	Fender washer, rod end open side	4	
16	BB8003	Bronze bush ø 8 × 3mm	2	(As per SB 019)