Kitplanes for Africa (Pty) Ltd
Port 49 Varkfontein 25IR
Hangar 1
Petit Airport
Rudi Street, Petit
Benoni, 1502

Vat no – 4190250029
AMORG – M715
Office - +27 (0) 11 965 6205

www.kitplanesforafrica.co.za
info@kitplanesforafrica.co.za

SERVICE BULLETIN

AIRCRAFT EFFECTED: All models pre-2008
BULLETIN NUMBER: SB011
ORIGIONAL ISSUE DATE: 01-12-00
REVISION DATE: 01-02-19
SUBJECT: Control column torque tube cracks
APPLICABILITY: All KFA aircraft pre-2008
COMPLIANCE: Mandatory

Problem: Cracks have been found on two occasions on the FCC control column torque tube, **left rear side**.

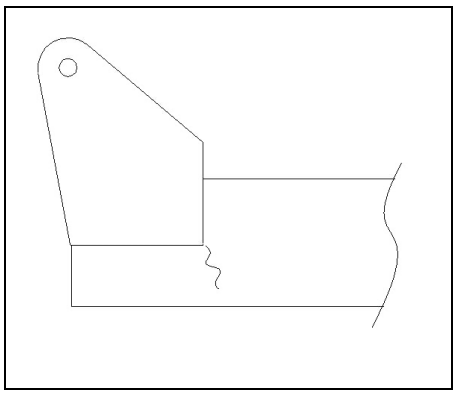

Solution: Remove the blue bearing block and inspect torque tube for cracks at every 100 hour or annual inspection.

If any cracks are found, send the part back to KFA for replacement or repair.