Kitplanes for Africa (Pty) Ltd
Port 49 Varkfontein 25IR
Hangar 1
Petit Airport
Rudi Street, Petit
Benoni, 1502

Vat no – 4190250029
AMORG – M715
Office - +27 (0) 11 965 6205

www.kitplanesforafrica.co.za
info@kitplanesforafrica.co.za

SERVICE BULLETIN

AIRCRAFT EFFECTED: Bushbaby and Explorer pre-2016
BULLETIN NUMBER: SB010
ORIGIONAL ISSUE DATE: 04-04-02
REVISION DATE: 01-11-2026
SUBJECT: Nose landing gear failure
APPLICABILITY: All Bushbaby and Explorer nose-wheel airframes pre-2016.
COMPLIANCE: Mandatory

Overview

This design of the castoring nose-wheel assembly is widely employed on other tail-wheel type fuselages and limitations on the use of this design are not unique to our aircraft.

Operators are respectfully reminded that the Bushbaby and Explorer airframes were designed originally as tail-wheel fuselages.

The nose-wheel was incorporated into the design at the request of some customers and this configuration was adopted with the proviso that the nose-wheel aircraft only be operated out of smooth runways and taxiways.

Tail-wheel undercarriages are far more suitable for rough field use.

By the nature of its design requirement for ease of installation as well as reconfiguration to tail wheel if desired, the nose-wheel strut is very intolerant of excessive side loads.

The nose-wheel fork stop tab limits left and right castoring of the nose-wheel in order to maintain propeller tip clearance. See diagram on the next page.

Problem: It has become apparent that some nose-wheel Bushbaby and Explorer operators are operating their aircraft beyond the design limits of the nose-wheel assembly during the ground handling phase.

If a main-wheel brake is applied to lock the main-wheel and force a very tight turning circle the nose-wheel fork will contact the stop tab which will in turn exert a side load on the nose-strut. This side load can quickly become excessive and repeated turns like this will lead to cyclic fatigue on the weld points of the fuselage tabs.

Failure of the fuselage tab weldments will lead to collapse of the nose-wheel strut, possible prop-strike, damage to the engine cowling and engine mount.

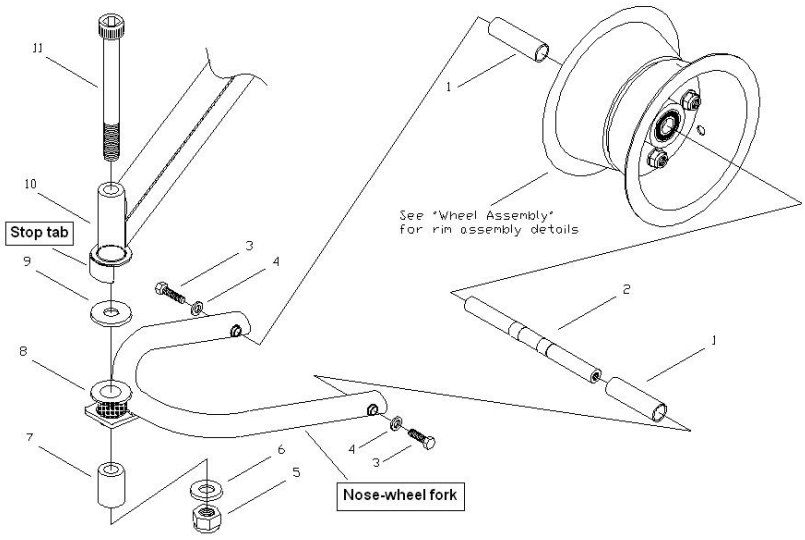

Nose landing gear fork assembly