THE MAGAZINE OF **THE LIGHT AIRCRAFT ASSOCIATION**

LIGHT Aviation

December 2021 £4.25

SAFARI... SO GOOD!

Francis Donaldson flies the XL-sized KFA Safari

Reminisces from Francis Donaldson and Brian Hope

Light Aircraft Association
WWW.LAA.UK.COM



ELECTRONIC CONSPICUITY
UNDERSTAND ITS FOIBLES AND LEARN HOW TO RESPOND TO IT



VINTAGE DELIGHT
PROGRESS MARCHES ON FOR BRITISH KLEMM G-ACXE...



The KFA Safari is a larger but budget variant of the Avid / Kitfox genre

The Team

Chairman
TIM HARDY

CEO
STEPHEN SLATER

Chief Engineer
FRANCIS DONALDSON
B.Tech C.Eng FRAeS

Chief Inspector
KEN CRAIGIE

President
ROGER HOPKINSON
MBE

Vice Presidents
BRIAN DAVIES & JOHN BRADY

Engineering email
engineering@laa.uk.com

COMMERCIAL
Email office@laa.uk.com
Office Manager Penny Sharpe
Head Office Turweston Aerodrome,
Nr Brackley, Northants NN13 5YD

Telephone for engineering and commercial
01280 846786

LIGHT AVIATION MAGAZINE
Editor BRIAN HOPE

60 Queenborough Road,
Sheerness, Kent ME12 3BZ
Telephone 01795 662508
Email bfjjodel@talktalk.net

A fond farewell to all…

Well, this is it, my final magazine as editor. Next month this column really will be Ed's Desk as Ed Hicks picks up the reins and takes the magazine into a new era. I'm sure he'll do a great job and I wish him as much enjoyment meeting and talking to so many fascinating members as I have over the years.

I am delighted that we managed to get Graham Smith's KFA Safari sorted in time for this issue. My thanks to photographer Neil Wilson and his team for going the extra mile to shoot the pictures, and to Francis Donaldson who flew the test and who has written up the article.

I had my first good look at the Safari at the Rally and hope it finds a ready market. There has always been strong demand for the Kitfox variations, but the Safari takes the genre a step further by enlarging the aircraft significantly. It now has a much chunkier look to it, more cockpit space and more carrying capacity, but a lower price than its smaller cousins (p26).

Jim Copeman has kindly sent in an update on his and Tony Palmer's delightful 1934 British Klemm L25C rebuild, which is edging ever closer to flying again. Work during lockdown has concentrated on the inlet and exhaust manifolds and engine installation, and the little Pobjoy radial has now been test run and all is well. I very much look forward to seeing the aircraft at events next year (p42).

Neil Fraser has written some excellent features on aircraft avionics over the past couple of years so it's great to feature him in this issue. Electronic Conspicuity is going to become increasingly important, although in recreational GA but at the moment the mix of systems and lack of standard protocols is not helping. Neil raises these issues and the impact they have on the user interpreting what their EC device is telling them and, if, and how they should react. Don't forget it is an aid, the Mk 1 eyeball remains the primary collision avoidance tool! (p14).

I hope readers will allow me the indulgence of a few final words of thanks, as 'editor' is only a title so people know where the buck stops. Magazines are produced by teams of often unsung participants.

Putting it together involves a team of regular contributors, plus many members who maybe submit individual articles only once. The team at Seager Publishing has, for over half of the 20+ years that I have been privileged to be the editor, moulded that material into the end product that you receive each month. And of course, there is the team that makes up the staff, offering help and guidance and keeping all the balls in the air as best they can.

Many people, now good friends, have made up those teams over the years and it would be unfair to start trying to single people out, but it has been a pleasure to have known you all, and to have been part of the team.

With Christmas and a New Year upon us, I wish you all the very best and a safe, happy and fulfilled life. Brian.

PS: *Someone once passed comment that my sign-off pic was taken when I was 'much younger' and 'unrepresentative'. Perhaps this one is more pertinent…*



By **Brian Hope**



Safari... so good

Francis Donaldson flies the interesting new KFA Safari, which debuted at the LAA Rally...

Pictures: **Neil Wilson**



LAA Flight Test

Back in December 2019, just a few carefree months before the world was turned upside down by Covid-19, we at LAA Engineering found ourselves in the position of dealing simultaneously with two new kitplane designs from South Africa, both based a few hours' ride from Johannesburg Airport. I had already seen a certain amount of emailed paperwork, but in a world as yet untroubled by 'red lists', 'green lists', or all the other accompanying travel paraphernalia of the pandemic, what better way to learn about the new types than to jump on an aeroplane and go and see the factories for myself?

The Safari, featured here, is a tough, load-carrying high-winger produced both as a kit and, for those countries that allow it, a ready-built aircraft. The Safari's type-acceptance in the UK is being pursued by Dover-based LAA member Graham Smith, whose previous experience of importing the popular SportCruiser and Groppo Trail kits will no doubt stand him in good stead. Graham has a strong track record in having overseen these types through the LAA process and supporting customers in the field with sorting out the problems inevitable in any kitplane build. He has also made a point of promoting kitbuilds at the budget end of the market, and had sold a good many SportCruiser kits into the UK during the heady days when they were made by CZAW and, for a year or two, sold like the proverbial hot cakes.

Budget pricing

While the price of kitplanes has followed a relentlessly upward trend since the epoch of the SportCruiser and Trail, in the Safari, Graham saw an opportunity to once more bring a kitplane to the market that could be built for a more modest outlay. It is a traditional kit that would actually need a fair bit of work to finish, including building the wings from their component parts and, once the airframe was fully equipped, covering the whole thing with fabric and applying the paint job. But for those for whom assembling high quality components would be a pleasure rather than a chore, and who are prepared to learn a few new skills along the way, this might just be a way of bringing another tranche of kitplane builders into the fold who might otherwise have found the bottom line simply too large an outlay for the family finances to swallow.

Petit Airfield, the home of Kitplanes for Africa, or KFA, turned out to be a modest looking grass airfield set amidst scrubby farmland, with a cluster of hangars ranged alongside a single runway more than 1,100 metres in length. In the drizzly conditions of my visit, it felt like a home from home, patterned after any number of our UK aerodromes – until, that is, it was pointed out that its elevation is more than 5,000ft asl!

In fact, had I gone over to South Africa in search of sunnier climes and an escape from the UK's autumnal dreariness, I would have been disappointed – the rain pelted down on all but the last day of my four-day visit. Disappointingly for all, the driving rain meant that while the trip gave me a chance to go over the design details and see the build process, there was no possibility for an in-flight evaluation. As it turned out, it wasn't to be until two years later that I got my first chance to try out the Safari in the air or write it up for *Light Aviation*.

Above The Safari certainly sets a tough bushplane image.

Kitfox on steroids

Seeing the Safari from a distance, you could easily mistake it for one of a number of clones of Dan Denney's Kitfox design – itself a dolled-up re-hash of Dean Wilson's original and inspired Avid Flyer of the mid-1980s. But coming up close, you'd surely recognise this newest addition to the LAA's fleet as a Kitfox on steroids – a bigger, beefier, and many will be glad to hear – roomier aircraft altogether, but still a recognisable offshoot from that illustrious bloodline of tube and fabric STOL aircraft. The Safari's max gross weight in the UK is to be 700kg, though in South Africa, where the type has been in action for almost 10 years now, it's cleared to 750kg under the local airworthiness rules. That's very nearly twice the weight that the original Avid Flyer operated at!

Conventional construction

The Safari has a welded steel tube fuselage, undercarriage legs and tail surfaces. Unusually these days, for the sake of economy and ready availability, seamless mild steel tube is used throughout, rather than the ubiquitous 4130 chrome-molybdenum variety, although KFA boss Stefan Coetzee is quick to point out that the most well-known light aircraft of all time, the Piper J3 Cub, also used mild steel tube in the majority of its construction, and for exactly the same reasons.

The Vee-strutted wings are built up with accurately pre-cut wooden ribs glued onto a pair of aluminium alloy tubular spars, with an internal truss of diagonal bracing tubes to brace the wings fore-and-aft. The flaperons, of composite construction, are hinged below the wing in so-called 'Junkers' fashion, so that they act almost as independent aerofoils rather than affecting the rear contour of the wing itself. The lift struts attach to the fuselage directly below the wing's rear spar attachment to facilitate folding the wings rearwards for storage, although this does involve a certain amount of disconnection of the flaperon controls and removal of a rear decking piece to make room for the wing roots to swing round and in.

The undercarriage is bungee-sprung, the bungees acting upon the centre of a substantial welded steel tube truss running the width of the fuselage, underneath the legs of the crew occupying the side-by-side configured cockpit.

Large bush-style wheels and tyres are generally fitted to emphasise the Safari's off-airport bushplane pretensions, but I was happy to see that this had not been carried to the extremes sometimes seen.

I can't see the point in dragging performance-sapping jumbo truck size tyres through the air, or worrying about the four-figure cost of their replacement should they get irretrievably damaged… not to mention the difficulty of dealing with the massively lop-sided elephant should one side get a flat.

Aerodynamic fences

The visual distinguishing features of the Safari, apart from its size, include a pair of aerodynamic fences on the upper wing surface, roughly at midspan and running chordwise. These are normally fitted to help control an aeroplane's wing drop at the stall, by delaying the spread of the stalled region from the wing root out to the tip area, or to generate a vortex that will act in a similar fashion. Similar fences – or are they endplates? – are also fitted to the outboard ends of the tailplane, just inboard of the aerodynamic balances which dominate the outboard section of the elevators. I haven't managed to ascertain whether they are to improve elevator effectiveness, or to change the pitch stability characteristics, or to change the elevator's hinge moment characteristics (all of which in combination go to make up the aeroplane's 'feel' in pitch). They certainly imply that the Safari's evolution has included significant development flight-test work – and they undoubtedly make a good talking point.

Old school tech

At the time when I visited KFA's works, I had already met Stefan at AERO Friedrichshafen where he'd taken me round a Safari on static display. On meeting him again, and being shown around KFA's hangars, it was obvious that Stefan is very much an old school boss, with a firm hand on every aspect of the establishment, from the gang of African fabricator/welders creating the fuselage frames in a rather dim backroom workshop to the 'front of house' design office and their records of past load tests and development modifications. In the assembly area, which was clearly their showpiece, a couple of Safaris under construction shared floorspace with kits being readied for delivery and an example of the smaller Explorer model that the Safari had been developed from.

While wing ribs and sheet metal parts were apparently being made by contractors using CNC equipment, the steel tube fuselages were constructed in an entirely traditional fashion using just saws and round files to prepare the steel tube pieces ready for installation into jigs, where the sub-assemblies would be welded before coming together in the single fuselage jig. Watching this in progress, it struck me how this was probably exactly the same way that so many of the fuselages for the early Kitfox and Avid kits had been made too, before the days of fancy CNC tube cutting machines. And with such a ready workforce to hand, and a relatively small throughput of aircraft, this may still be the most cost-efficient way to do it. Having said that, KFA's output would be the envy of many other kit manufacturers – its website describing how, since 1993, it has produced over 300 of their first model, the Bushbaby, followed by 186 of the Explorer and 110 of the Safari.

912 ULS with aftermarket turbo

The factory tour gave an opportunity to see the interesting range of powerplants that KFA endorse, mostly Rotax-based. I was able to see and be briefed on a new installation of the top-of the-range 915iS being finished off, and also a VZ Power 912 ULS that's been modified to add a turbocharger, complete with automatic wastegate system which, like the 915, uses a pneumatic control rather than the 914's electrical servo to moderate the boost pressure. This boosted 912 ULS conversion is the engine fitted to both of the first pair of Safaris being built in the UK.

KFA has adopted this 135hp VZ conversion as a potentially cheaper alternative to the 914, involving fitting lower compression pistons, twin electrical high-pressure fuel pumps and a fuel pressure regulator. The fuel pressure regulator must be adjusted to give a fuel pressure between 3.6psi to 5.5psi, relative to the inlet manifold pressure. The standard Bing carburettors have to be modified to cope with the higher fuel pressure by replacing the float bowl gaskets with a rubber seal to prevent them from leaking.

The fuel pressure gauge has to be the more expensive differential pressure type to monitor fuel pressure relative to the intake manifold pressure, as a standard fuel pressure gauge measuring pressure relative to atmosphere would not display meaningful information.

Unlike some other turbo conversions, the VZ conversion doesn't include welding the sections of the 912 ULS's multi-piece crankshaft together to prevent it twisting out of alignment at maximum torque – KFA claims that providing the engine's boost is limited to give no more than 135hp, no slippage will occur. Cooling, it seems, is no great problem given that the turbo boost is only intended to be used for short periods, to get out of a very short strip, and over the trees, for example, rather than for continuous use, or even to equal the 914's five minutes maximum of turbo-boosted power.

In this turbo installation, the wastegate's pneumatic control automatically limits the manifold pressure to 38 inches of mercury, so there's no need to worry about the risk of over-boosting the engine. The adjustment is very simply made by altering the length of the pushrod that connects the wastegate to the diaphragm type pneumatic actuator. In the cruise, KFA suggest throttling the engine to a manifold pressure of between 30 and 34 inches Hg.

The turbo's bearings are fed with pressurised oil from the Rotax's standard oil pump, which diverts some of the oil feed from the engine oil gallery, causing a small reduction in the oil pressure, which the factory suggest you can compensate for by shimming the oil pressure relief valve.

An additional scavenge pump is added to return the oil from the turbo to the oil tank – the Rotax 900 series engines rely on crankcase pressure alone for scavenging the regular oil system.

Fuel system

The Safari's fuel system uses a pair of clear fibreglass wing tanks, mounted in the wing root, so that the content level of the tank is visible from the cockpit. On demand, LED lights in the wing roots can be switched on to better illuminate the gently heaving fuel level. The feed from these tanks is from their rear inboard corners, so prolonged steep descents with a low fuel level can cause a temporary interruption in fuel flow. To deal with this, KFA have a header tank located on the floor in the forward fuselage, also of clear fibreglass construction, mounted in between the P1 and P2 rudder pedals. The header tank feeds the engine via twin pumps plumbed in parallel, each with an external non-return valve to prevent back-feeding. The two electric fuel pumps must be wired into individual circuits i.e., one pump runs off the battery and the other runs from the alternator. A relay connects the two circuits which can be switched off to prevent both pumps being put out of action should one pump short-circuit. A high-capacity Bosch F-2161 fuel filter is fitted, and it's recommended to change the fuel filter every year.

Individual shut-off valves control the flow of fuel from each wing tank to the header, while a third shut-off valve allows the pilot to isolate the header tank feed from the engine in the case of an emergency, such as an engine fire. It's recommended to fly with both tanks and both electric pumps selected when below 1,000ft. The top of the header

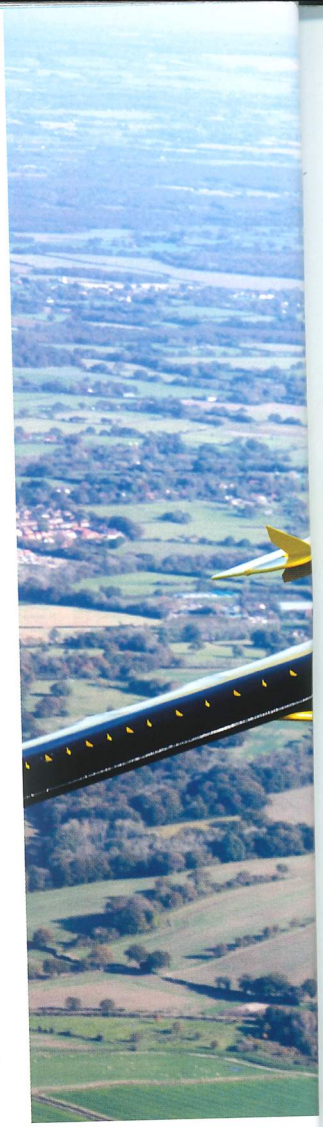

Above Note wing and tailplane fences, and vortex generators.

Right Schematic of the complex fuel system.



tank is vented back to both wing tanks via a tee piece, while return fuel from the pressure regulator is fed back to the header tank. As many of the early Kitfox owners found out, this arrangement relies on gravity to flow from the wing tanks to the header tank, so the proper 'run' of the feed pipes is important to avoid any airlocks that might disrupt the flow and allow the level in the header tank start to fall. Should this happen, a low-level sensor positioned near the top of the

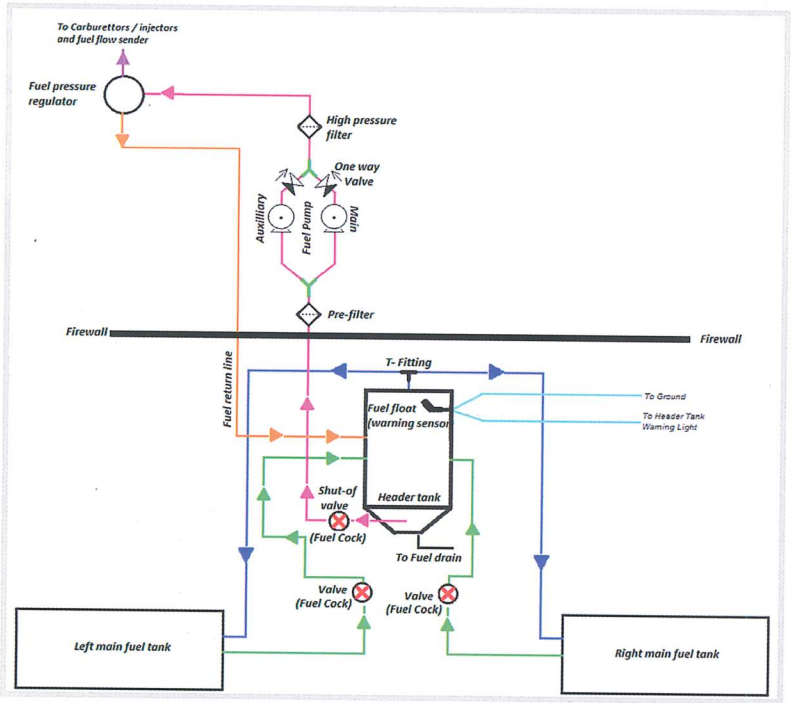

header tank will trigger a warning to the pilot that he needs to take action to get the fuel flowing again – change tanks, most likely – or give him plenty of time (around 10 minutes) to find a friendly field and make a power-assisted precautionary landing. There's a press-to-test button to make sure the low header tank fuel warning light works before take-off, which is an important part of the run-up checks. Speaking of checks, there's a drain connected to the base of the header tank which is useful, as any water from either wing tank will collect there eventually – it's recommended to check the water drain prior to the first flight of the day using a fuel sampler.

An important element of the turbo's fuel system is the fuel intake manifold, which is provided with five connection ports, to accommodate the pressure sensing line from the pressure regulator, both carburettor overflows and a VDO temperature sender – the fuel intake temperature must be monitored. While it should normally settle at about 40°C, if the temperature rises to over 60° then the engine is likely to stop without notice, due to fuel evaporation.

One or two mods

After I returned from South Africa, and having thrashed out an agreed way forward for the technical submission and load testing or calculations that we would need to see presented, we agreed that Graham and serial LAA homebuilder Dudley Patterson could be issued project numbers and build packs for a pair of Safari projects on the strict understanding that, as with any new type that's still under evaluation, the issue of a Permit to Fly would be dependent on the submission being provided and all found to be in order, as well as, of course, successful flight testing. For Graham, the risk was all part of the challenge of getting



a new type cleared, while Dudley, with an empty workshop to fill, saw the Safari as just what he needed and just had to be part of the action.

Graham noted a few tweaks which he felt were necessary during his build, to suit the normal LAA protocols, and when Ben Syson and I visited Graham in the summer of this year to see his finished 'UK prototype', resplendent in bright yellow finish, we found a few more things that we felt needed attention. The aileron pushrod in the cockpit ran fore-and-aft alongside the port seat, but rather than being straight, like most push-pull rods, it had been designed with a double bend in it to give clearance to the obstruction created by the bucket part of the seat. This lack of straightness made the pushrod too liable to bend for it to meet the very severe control system test requirements that apply nowadays, so Graham fashioned a guide plate out of nylon that would be introduced as a required LAA mod, which would restrain the pushrod in its attempts to bend sideways under load. We also went to some lengths to make sure that the pilot's right foot (or the P2's left foot) couldn't get caught between the inboard edge of the toe brake and the front end of the centre console, where we were concerned it might otherwise cause a control restriction.

Approval to fly in time for the Rally

Happily, despite some of the KFA submission still being incomplete at that stage, we were able to get Graham's Safari cleared for test flying on LAA's 'B Conditions' (colloquially known as a Permit to Test, although these are no longer used) in time for it to be able to make the trip up to the LAA Rally at Sywell, albeit with some additional restriction on the Vne pending the completion of the outstanding stress items. Dan Griffith, LAA's Chief Test Pilot, is the project test pilot, and is working his way through the schedules as time allows, insofar as is possible with the present limited envelope. However, ever curious as to how a new type will perform in the air, I was also privileged to fly the aircraft with Graham during a late September introductory hour-long getting-to-know-you session from Turweston's grass.



Above top Generous aerodynamic balances. Note baggage bay door.

Above Graham Smith standing by the Safari highlights its size.

I shan't dwell on the outside appearance, as Neil's photos do very adequate justice to that aspect. It's big, when you get up close, so you climb up into it, rather than, as with its 1980s ancestors, just opening the top-hinged door, sitting down backwards on the seat and swinging your legs in. Once seated, I found that I could just about see directly forward over the nose, which was unexpected, given the relatively long cowling – that sleek entry and small spinner certainly helps minimise the amount of landscape obscured. With Graham and me on board, both being, shall we say, of a fair size, the cockpit was wide enough that we weren't rubbing shoulders or short of knee room. I still had a couple of inches of headroom, too, and could look out horizontally sideways through the side windows – on some high wingers you find your head alongside, rather than below the wing root, feeling very blinkered in turns. The skylights in the Safari's roof panel also help, although if it were mine, I'd be more inclined to make the whole top transparent and add a sliding fabric blind to keep the sun off when necessary.

The door latches convincingly with a pair of linked shoot-bolts at the front and rear, so there's no fear of the door opening in flight – unless you want it to, of course,



and this is permitted, for that open-air experience, provided you keep the airspeed below 70kt or 80kt with the doors removed.

The Safari's controls are standard for this class of aircraft, with a central plunger-type throttle and toe brakes. A couple of large fuel valves are fitted either side of the throttle, their positioning certainly helps you keep fuel management in mind – Graham advises flying on one tank at a time to keep the tanks levelled manually by switching over every half hour. Alternatively, you can fly on 'both' but as with most such systems, they won't necessarily feed equally. Electric pitch trim is controlled by a rocker switch on the panel, the familiar accompanying Ray Allen type trim position indicator being located alongside. Unusually, the manually operated flap lever (in reality, for drooping the flaperons) located centrally between and in front of the seats, has no conventional gate providing different flap settings, instead you can select any position between zero and full flap at will, relying on friction to keep it where you set it. With the flapperons being aerodynamically balanced, unlike with plain flaps there's no great force required to deploy them, otherwise this arrangement wouldn't work.

First-class placarding

What particularly caught my attention after strapping in was Graham's eye-catching, not to say striking placard set, which he had had specially laser-cut, thanks to a work contact. Colour-matched with the aircraft's paint scheme, these placards and labels are nothing if not clear, and a definite aid in rapidly identifying what's what in an unaccustomed cockpit – and, I suspect, pulling or pushing the right thing in an emergency. We tend to treat placards and labels as if they were somehow an afterthought, but this is a mistake – especially with the complexity of instrument panels nowadays and the regrettable lack of standardisation about layouts and operating procedures. The choice of wording of the labelling of a switch can make all the difference between a safe flight and a tragedy. On one occasion I had to abort a flight during the run-up checks because it wasn't clear which position of the fuel selector corresponded with which tank, and there wasn't enough pipework visible to identify how it had been plumbed. Full marks to Graham for bucking the trend with some really effective labelling, custom-made for the Safari.

Graham had impressed on me that the turbo'd 912 ULS was powerful, but that since he's optimised the set-up it was very sweet to operate. The aeroplane was fitted with an inflight adjustable electric Ivoprop propeller – one of those ones which, to change pitch, twists the blades along their length using internal torsion bars, rather than twisting the whole blade about pitch-change bearings built into their roots. But Graham had found that once set to give 5,700rpm at full throttle for take-off, the cruise rpms were pretty much spot on at a reduced throttle setting without the need to fiddle with the prop pitch, so a cheaper fixed pitch prop would match the torque curve of the blown engine in the Safari airframe perfectly adequately.

Time to fly

Still slightly warm from Graham's flight over, the turbo-charged 912 ULS started on the first press of the button, its reduced compression compared to the normally aspirated 912 ULS making it seem super-smooth, like the 914. The start-up procedure involves remembering that there are two electric fuel pumps to test, and a mental note to be made that switching off BOTH pumps in flight will result in an





Right Beefy structure and plenty of window area.

Far right A busy engine bay with an aftermarket turbo.

Below Nicely turned out panel and explicit placarding.



all-too-instant silence. Otherwise, and apart from the novelty of seeing manifold pressures up to 38 inches, it's standard 912 procedures – the wastegate's automatic controller sees to all that, and you only need to watch out for any signs of overboost indicating the control system has malfunctioned, such as from a stuck wastegate for example. Should it overboost, you need to throttle back smartly to bring the manifold pressures back under control – especially with that press-fit crankshaft! There's a warning light that's triggered if the max boost pressure is approached or exceeded.

Manoeuvring the aircraft on the ground, it seemed a little ponderous at first in responding to jabs of the rudder and toe brake to steer around corners, until Graham pointed out that I wasn't managing to get the steerable tailwheel to break out, which as it was set up, required absolutely maximum rudder travel. Even resting the 'other' foot on its rudder pedal was seemingly enough to keep the rudder from full deflection and prevent the tailwheel going into caster mode. It's certainly an important reminder of how sensitive these tailwheel units can be to their set-up – another LAA'er has since been showing me how he had to alter the cam on his tailwheel unit to make it less prone to breaking out when he didn't want it to – just after touchdown in a crosswind. I can't help wondering how many expensive incidents may have been triggered by a tailwheel unit being not quite set right during the check flight, when 'I can live with that' may so easily herald a disaster later.

Taking off, I found the engine accelerated very smoothly on opening the throttle, with no alarming surge from the turbo boost coming in – everything seemed very controllable and the Safari was up and away almost before I had reached full throttle. There was no problem keeping straight or with a lot of 'right foot' being needed in climbing away at 60kt. The Safari felt very responsive, particularly in roll, and with the mechanical flaperons reset to zero, and powered back to a relaxed sounding 5,200rpm/32 inches Hg, wound its way quickly to 4,000ft, averaging something in the region of 1,000ft/minute.

Speed stability

On the way up, inducing gentle speed variations by ten knots above and below the trim speed showed that she was very respectably speed-stable for this class of aircraft – on many you're hard pushed to feel any significant change of stick force over quite wide changes of speed. Likewise, experimenting with the rudder showed that she was convincingly directionally stable with feet on, returning promptly from an induced yaw on centring the pedals, and slowly, but nevertheless surely, the yaw diminished 'feet off' on release.

Up and away, Graham had warned me that I might find the Safari over-sensitive in roll, but I found it typical of the breed of aircraft with full span flaperons, i.e. a powerful control giving very good roll authority. As with other similar flaperon equipped types, because of the narrow chord of the control surfaces and multiple friction-inducing hinges, they don't have a tendency to self-centre for angles less than about 1/3 deflection. Consequently, after making any small roll input you have to put the stick back to the centre yourself rather than just giving it a nudge and then letting it neutralise by itself. This can initially give an impression of over-sensitivity but it's something you very quickly learn to accommodate and no longer notice.

Where the roll control *was* unusual was that there was very little adverse yaw, thanks no doubt to the very generous amount of differential action used in its flaperon control system – in other words, when you move the stick to either side the up-going flaperon moves through a much greater angle than the down-going one. The lack of adverse yaw is particularly noticeable at high speeds, when you can fly the Safari into and out of banks with no co-ordinating pedal input at all, without sending the skid ball more than a balls-width off-centre.



Above Sleek cowling aids forward view.

The lack of flaperon self-centring after making a small roll input means you don't learn much from the standard 'stick release in a sideslip' lateral stability test, as releasing the stick in a sideslip resulted in the stick staying where it was put (or returning very slightly), which held the depressed wing down despite the countering effect of the deflected rudder. However, manually centring the stick in a sideslip, or testing entering and recovering from turns with rudder action alone, showed that the Safari does have positive dihedral effect (a measure of lateral static stability). Like similar flaperon equipped aircraft, the lack of aileron self-centring need not be a problem for a day-VFR aeroplane, though the tendency to chase the horizon would likely create a significant extra workload if trying to fly on instruments in IMC – but of course, that isn't what something like the Safari is about.

With the flaperons lowered to provide a flap effect, there's a slight nose down trim change and as with most flaperon systems, a reduction in roll authority and increase in adverse yaw effect. But in the Safari, these traits are not marked and even with full flap and at speeds approaching the stall, there's plenty of roll authority available providing you remember to use your feet to keep things co-ordinated.



A nice stall

Wings level stalls, whether power off or power on, and carried out with flaperons either up or down, produced benign and generally wings-level stall breaks, only showing her teeth by dropping her nose and right wing more sharply if one abused the situation by heaving the stick to the backstop after the nose had started to drop. Positive action to unload the wing at this point instantly arrested the roll-off and got us flying again. Noted stall speed was 36 knots with full flap.

As in the climb test, the aeroplane proved pleasantly speed stable both in the cruise configuration and in a simulated approach, the trimmer allowing the aircraft to be trimmed in the cruise with a few jabs on the panel mounted rocker switch. At the mid cg position tested, full up trim was needed to trim for the approach at 60kt, with full flap and approach power, so that a slight residual back stick force was needed to maintain the recommended 55kt, perhaps indicating that a small adjustment of the trim tab range of movement will be needed to comfortably accommodate the full range of cg positions.

Winding the Safari round in continuous steep turns showed that the aeroplane has quite high stick force per g for this class of aircraft – meaning it would be difficult to overstress it inadvertently, and there's no feeling of it being over-sensitive in pitch despite the rather impressive looking end-plated tailplane / elevator combo.

Good to sideslip

The combination of the fairly weak directional stability, powerful roll authority and plenty of fuselage side area makes the Safari very comfortable in an intentional sideslip, where a 30° wing low attitude can be held with ease in straight flight, and a great deal more in a sideslipping turn. Given the relatively small amount of flaperon deflection in the 'flap' mode, which doesn't give a huge increase in the flapped rate of descent, sideslipping is certainly an important feature in the Safari's repertoire where the mission involves approaching over tall trees and then getting down and stopped in a short distance.

With the boosted 912 ULS, the Safari is a lively performer, quick off the ground and climbing strongly with the engine buzzing away reassuringly smoothly. The engine is a pleasure to operate, and feels very willing throughout. On Graham's installation, the oil pressure is comfortably in limits and the temperatures are also running cooler than standard – he's only seeing a cylinder head temperature of around 88° to 90°C, (the maximum is 115°).

On the take-off run and in the climb the engine settles to 5,800rpm, and just above the treetops we throttled back to 32 inches and an rpm around 5,200, which yielded a climb rate around 1,000fpm. Once at cruise altitude, throttling back to a manifold pressure of 29 inches the rpm settles around 4800rpm and indicating 85kt. At 2,000ft it cruises comfortably at 85kt burning 20litres/hr.

To understand where this performance sits in relation to other 912 ULS powered aircraft, it's important to keep in mind that this is no lightweight microlight – with a max loaded weight of 700kg it's a lot more aeroplane than a 450kg microlight. With an empty weight of 405kg, and a fuel capacity of 125 litres, the Safari can carry two crew each weighing 86kg, a hefty 37kg of baggage, and full fuel (90kg) and remain within its legal 'max gross'. That's enough fuel for five hours' flying, with reserves – and carrying camping kit…

Amiable and well-mannered

Overall, I found the Safari an amiable, well-mannered and thoroughly tractable aeroplane which did what was asked of it uncomplainingly, and would clearly be a great deal of fun to fly, particularly in a backwoods type of environment where its STOL performance and big low pressure tyres would really come into their own. The VZ Power turbo conversion of the 912 ULS was a pleasure to fly behind, the low-compression pistons taking away all the harshness of the standard 912 ULS.

Flying locally from Turweston's bowling-green runways, I felt a bit like mum doing the school run in the 4x4. The Safari would be just the job for off-airfield flying in the wilder and more distant parts of the country, but equally at home in the more gentle surroundings of the farm strips of the Home Counties. ■

KFA Safari Specifications

General characteristics

Cockpit width: 1.194m
Total length: 6.415m
Wingspan: 9.34m
Wing Area: 12.1 m²
Height: 2.625m
Empty Weight: 390-410kg
MTOW: 700kg
Rate of Climb: 1300ft/m
Stall Landing config: 42kt
Stall full flap: 40kt
Cruise @ 75% power: 110kt @7500ft
VNE: 126kt
Engine: 100 /135hp Rotax 912.
W: *https://www.spriteaviation.co.uk/*
E: *graham@spriteaviation.co.uk*



TRAFFORDS
AVIATION INSURANCE
Competitive rates for aircraft insurance
Instalments available


TRAFFORDS LTD
7 Doolittle Yard, Froghall Road, Ampthill, Bedford MK45 2NW
Tel: 01525 717185 Fax: 01525 717767
e-mail: info@traffords-insurance.co.uk
www.aircraft-insurance.co.uk